# Seed Picker & Pipe Folder Control V2.1

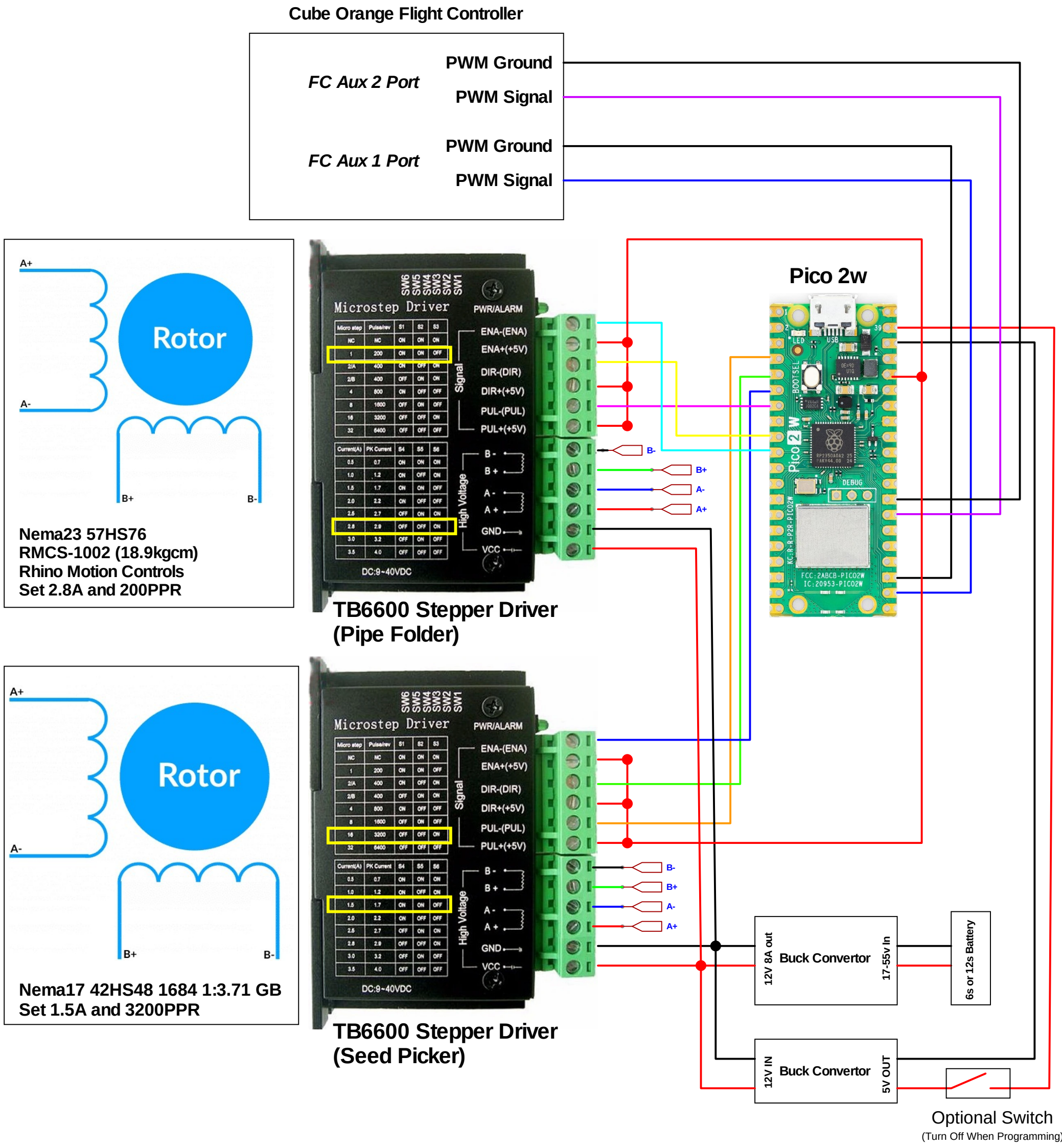


***Note :- Never Connect 5v logic pwm as input to pico 2w***


Circuit Drawn By :- K Madhu Mohan Chary
Created On :- 23-Mar-2026
Version :- v2.1
Contact info :- madhu@marutdrones.com


MARUT - DRONES -